LAST

TARVO
TARVO MX
CINTO
CINTO MX

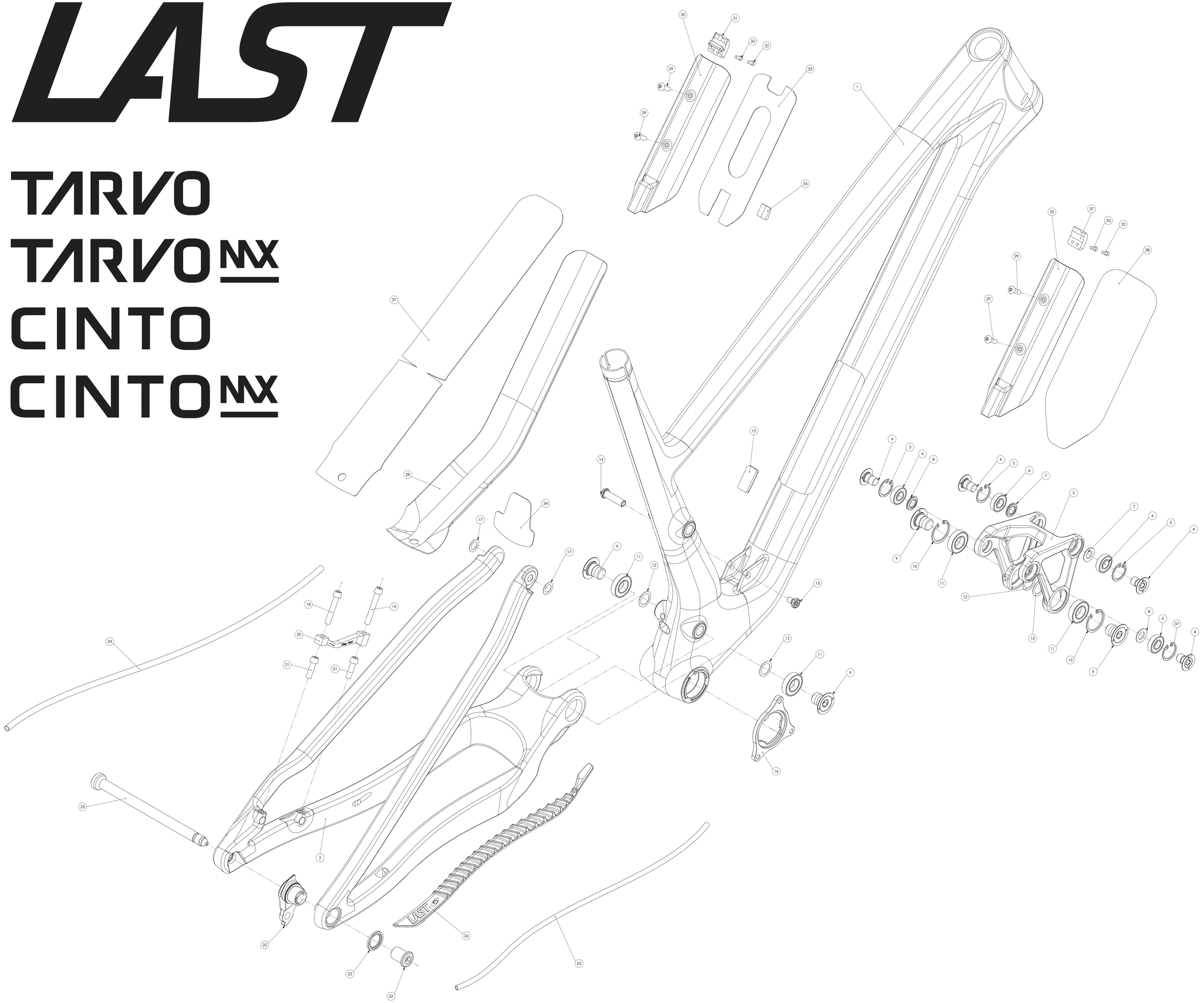

Disclaimer:
Not all dispayed or listed parts may be in the scope of supply of your frame/bike.
LAST reserves the right of error and technical modifications.

Revison: 00

Pos.	Item	Art. No.	Comments
1	Front Triangle Size M Superduty	110430	
	Front Triangle Size L Superduty	110431	
	Front Triangle Size XL Superduty	110432	
	Front Triangle Size XXL Superduty	110455	
2	Swingarm	110433	
3	Rocker TARVO 29 - 160 mm	102256	29 front + rear
	Rocker TARVO MX - 170 mm	110351	29 front + 27,5 rear
	Rocker CINTO 29 - 145 mm	110257	29 front + rear
	Rocker CINTO MX - 145 mm	110481	29 front + 27,5 rear
4	Bolt M10xP1.0	102285	
5	C-Lock Ring Size 22	110271	DIN 472-22x1.0
6	Bearing 10x22x6	102358	full complement
7	Spacer M10 Regular	102249	
8	Spacer M10 Thick	110359	
9	Bolt M14xP2.0	102233	
10	C-Lock Ring Size 28	101873	DIN 472-28x1.2
11	Bearing 15x28x7	101075	full complement
12	Shim Washer 14x0.2 mm	110779	Shim washers are used to fine adjust the width. The necessary quantity and size is individual
	Shim Washer 14x0.5 mm	101870	
	Shim Washer 14x0.8 mm	101868	
	Shim Washer 14x1.0 mm	101869	
13	Bolt M6 Titanium	110274	
14	Sleeve Nut M6 Titanium	110275	
15	Magnet	110295	
16	ISCG 05 Adapter	110369	optional accessory
17	Shim Washer 10x0.2 mm	100027	Not necessary if thick spacer (110359) is used.
18	Bolt M6x35 Titanium	110152	Necessary for 200/203 mm rotors.
19	Bolt M6x40 Titanium	110153	Necessary for 200/203 mm rotors.
20	20P Adapter	101413	Necessary for 200 mm rotors.
	23P Adapter	110780	Necessary for 203 mm rotors.
21	Bolt M6X20 Titanium	110151	Necessary for 180 mm rotors.
22	UDH Derailleur Hanger	110758	
23	Through Axle	110120	
24	Guiding Tube for brake	110766	
25	Guiding Tube for for derailleur cable	110767	
26	Cainstay Protector	110245	
27	Adhesive Tape for Downtube Protector-Size M	110768	
	Adhesive Tape for Downtube Protector-Size L	110769	
	Adhesive Tape for Downtube Protector-Size XL	110770	
	Adhesive Tape for Downtube Protector-Size XXL	110771	
28	Downtube Protector - Carbon - Size M	110266	
	Downtube Protector - Carbon - Size L	110263	
	Downtube Protector - Carbon - Size XL	110264	
	Downtube Protector - Carbon - Size XXL	110265	
29	Bolt M5x15 Titanium	110148	ISO 7380
30	Storrage Cover V02 - Size M - Black	110765	
	Storrage Cover V02 - Size L - Black	110293	
	Storrage Cover V02 - Size XL - Black	110289	
	Storrage Cover V02 - Size XXL - Black	110727	
31	Latch	110772	not compatible with V01 covers
32	Bolt M3x8	110719	DIN 912
33	Sealing for Downtube Cover - Size M	110776	
	Sealing for Downtube Cover - Size L	110773	
	Sealing for Downtube Cover - Size XL	110774	
	Sealing for Downtube Cover - Size XXL	110775	
34	Mudguard	110777	
35	Stopper	110781	
36	Storrage Cover V01 - Size 175	110782	The V01 version has a ribs starting from the bottle cage bolt holes.
	Storrage Cover V01 - Size 185	110783	
37	Latch for V01 Cover	110784	only for V01 covers
38	Frame Protection Film for Storrage Cover V01	110785	only for V01 covers
	Protective Film Chainstay Matt	110778	
	Protective Film Chainstay Glossy	111122	