LAST

ASCO CELOS

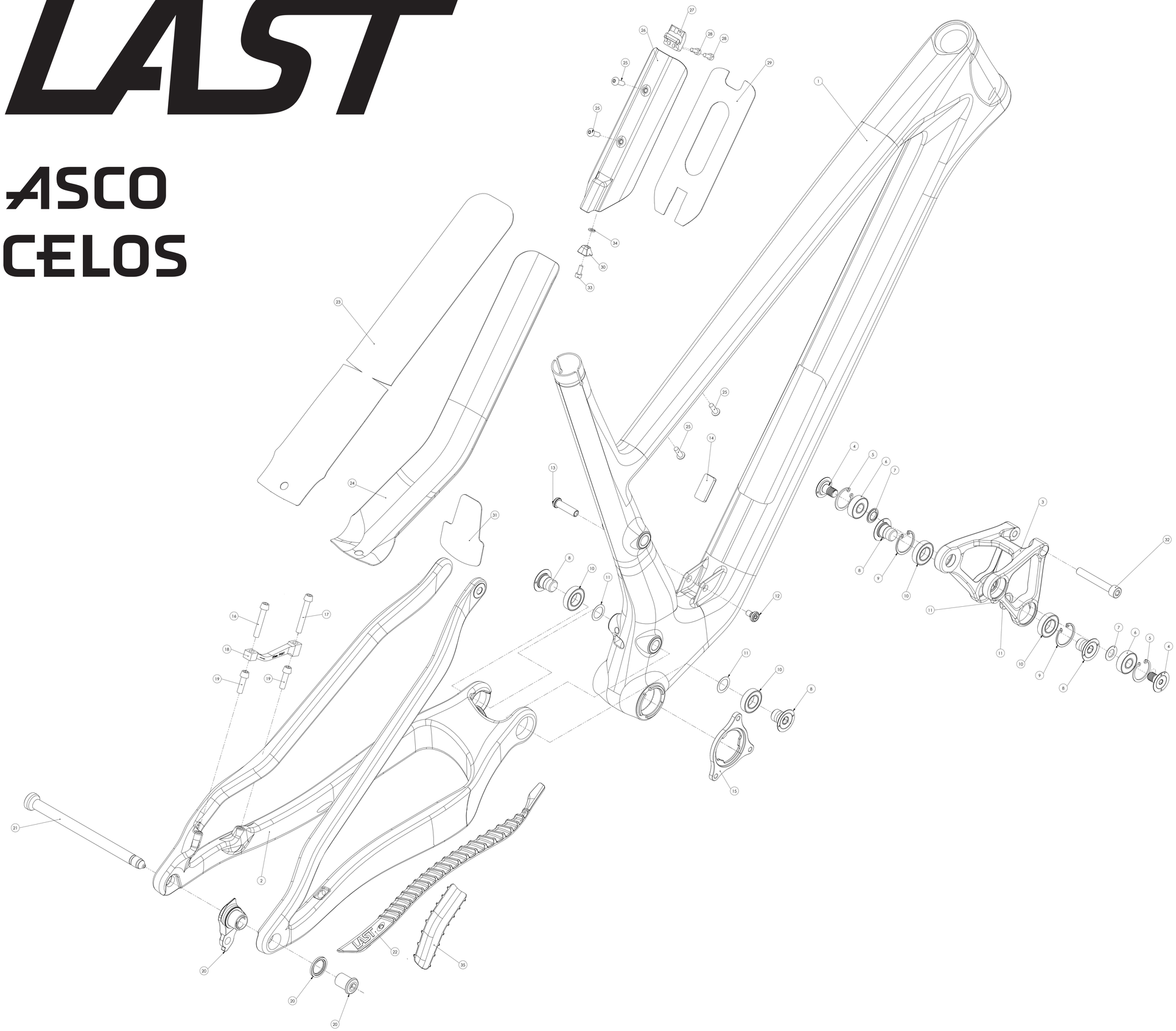

Disclaimer:
Not all dispayed or listed parts may be in the scope of supply of your frame/bike.
LAST reserves the right of error and technical modifications.

Revison: 00

Pos.	Item	Art. No.	Comments
1	Front Triangle Size M Superduty	110430	no top tube tool mount
	Front Triangle Size M Featherweight	111171	no downtube storrage
	Front Triangle Size L Superduty	110431	no top tube tool mount
	Front Triangle Size L Featherweight	111172	no downtube storrage
	Front Triangle Size XL Superduty	110432	no top tube tool mount
	Front Triangle Size XL Featherweight	111173	no downtube storrage
	Front Triangle Size XXL Superduty	110455	no top tube tool mount
	Front Triangle Size XXL Featherweight	111174	no downtube storrage
2	Swingarm	111175	
3	Rocker ASCO/CELOS	102258	
4	BOLT-M10xP1.0	110942	
5	C-Lock Ring Size 26	111153	DIN 472-26x1,2
6	Bearing 10x26x8	111024	full complement
7	Spacer M10 Thick	110359	
8	Bolt M14xP2.0	102233	
9	C-Lock Ring Size 28	101873	DIN 472-28x1,2
10	Bearing 15x28x7	101075	full complement
11	Shim Washer 14x0,2 mm	110779	Shim washers are used to fine adjust the width. The necessary quantity and size is individual.
	Shim Washer 14x0,5 mm	101870	
	Shim Washer 14x0,8 mm	101868	
	Shim Washer 14x1,0 mm	101869	
12	Bolt M6 Titanium	110274	
13	Sleeve Nut M6 Titanium	110275	
14	Magnet	110295	
15	ISCG 05 Adapter	110369	optional accessory
16	Bolt M6x35 Titanium	110152	Necessary for 200/203 mm rotors.
17	Bolt M6x40 Titanium	110153	Necessary for 200/203 mm rotors.
18	20P Adapter	101413	Necessary for 200 mm rotors.
	23P Adapter	110780	Necessary for 203 mm rotors.
19	Bolt M6X20 Titanium	110151	Necessary for 180 mm rotors.
20	UDH Derailleur Hanger	110758	
21	Through Axle	110120	
22	Cainstay Protector	110245	
23	Adhesive Tape for Downtube Protector-Size M	110768	
	Adhesive Tape for Downtube Protector-Size L	110769	
	Adhesive Tape for Downtube Protector-Size XL	110770	
	Adhesive Tape for Downtube Protector-Size XXL	110771	
24	Downtube Protector - Carbon - Size M	110266	
	Downtube Protector - Carbon - Size L	110263	
	Downtube Protector - Carbon - Size XL	110264	
	Downtube Protector - Carbon - Size XXL	110265	
25	Bolt M5x15 Titanium	110148	
26	Storrage Cover V03 - Size M - Black	110765	
	Storrage Cover V03 - Size L - Black	111054	
	Storrage Cover V03 - Size XL - Black	111055	
	Storrage Cover V03 - Size XXL - Black	111056	
27	Latch M4	110290	
28	Bolt M4x8	111176	DIN 912
29	Sealing for Downtube Cover - Size M	110776	
	Sealing for Downtube Cover - Size L	110773	
	Sealing for Downtube Cover - Size XL	110774	
	Sealing for Downtube Cover - Size XXL	110775	
30	Stopper M4	110781	
31	Mudguard	111179	
32	Bolt M8x55 Titanium	102359	Din 912
33	Bolt M4x10	111177	DIN 912
34	Washer M4	111178	
35	Seatsay Chain Protector	111180	
	Protecive Film Chainstay Matt	111190	
	Protecive Film Chainstay Glossy	111189	